DO NOT SCALE - IF IN DOUBT, ASK

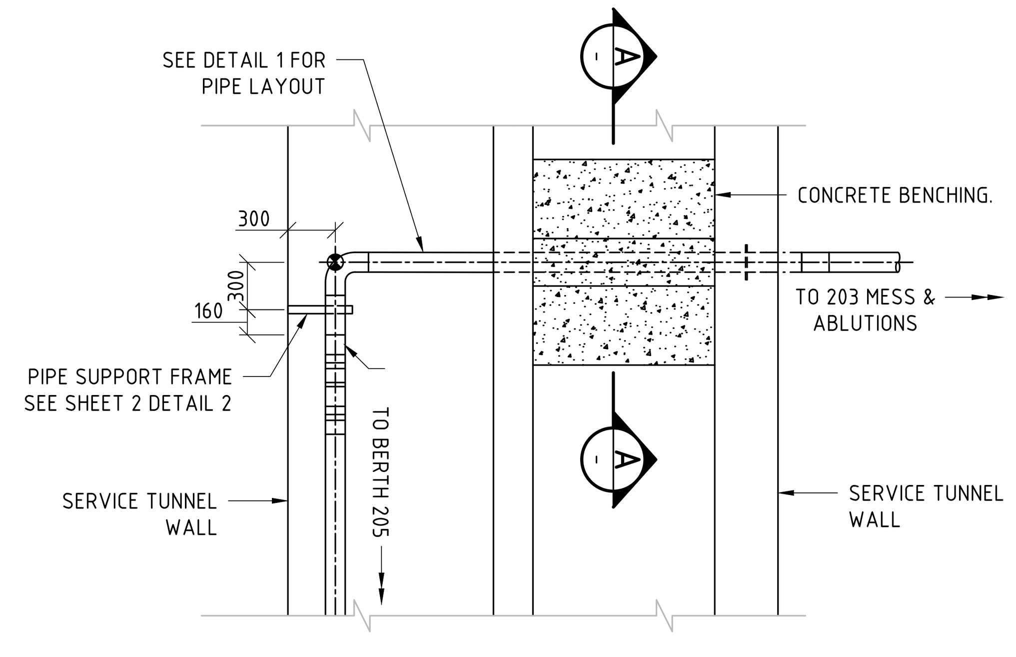

SEWER RISING MAIN ENTRY INTO SERVICE TUNNEL
1:40

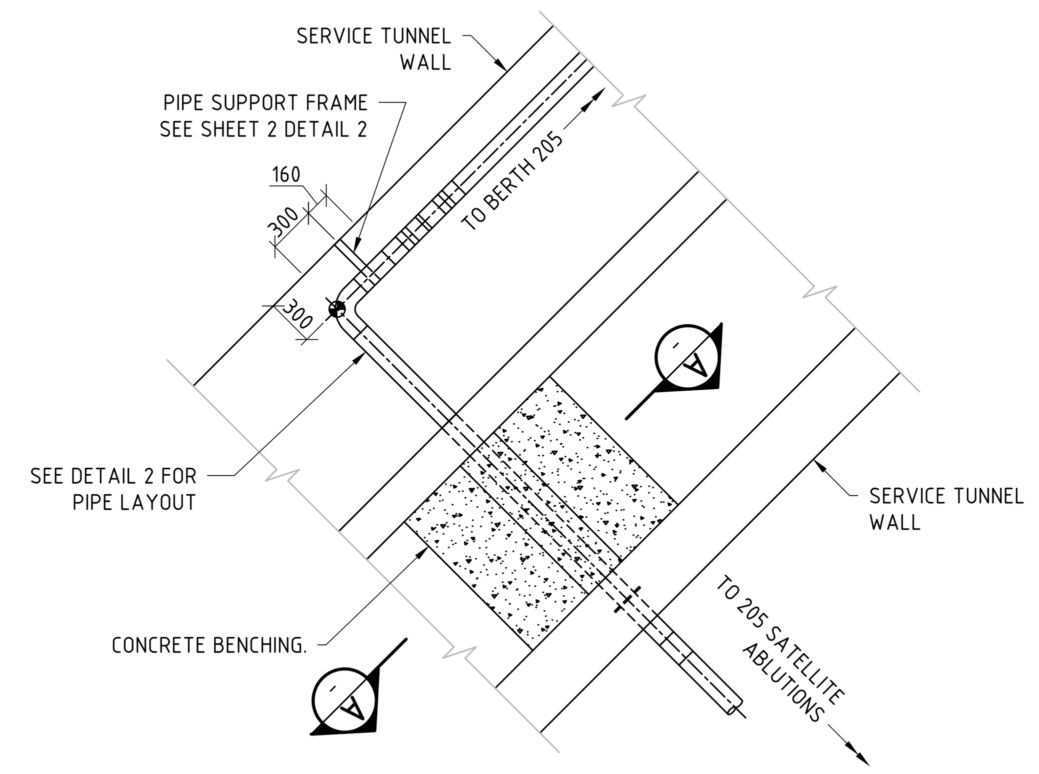

SEWER RISING MAIN EXIT FROM SERVICE TUNNEL
1:40

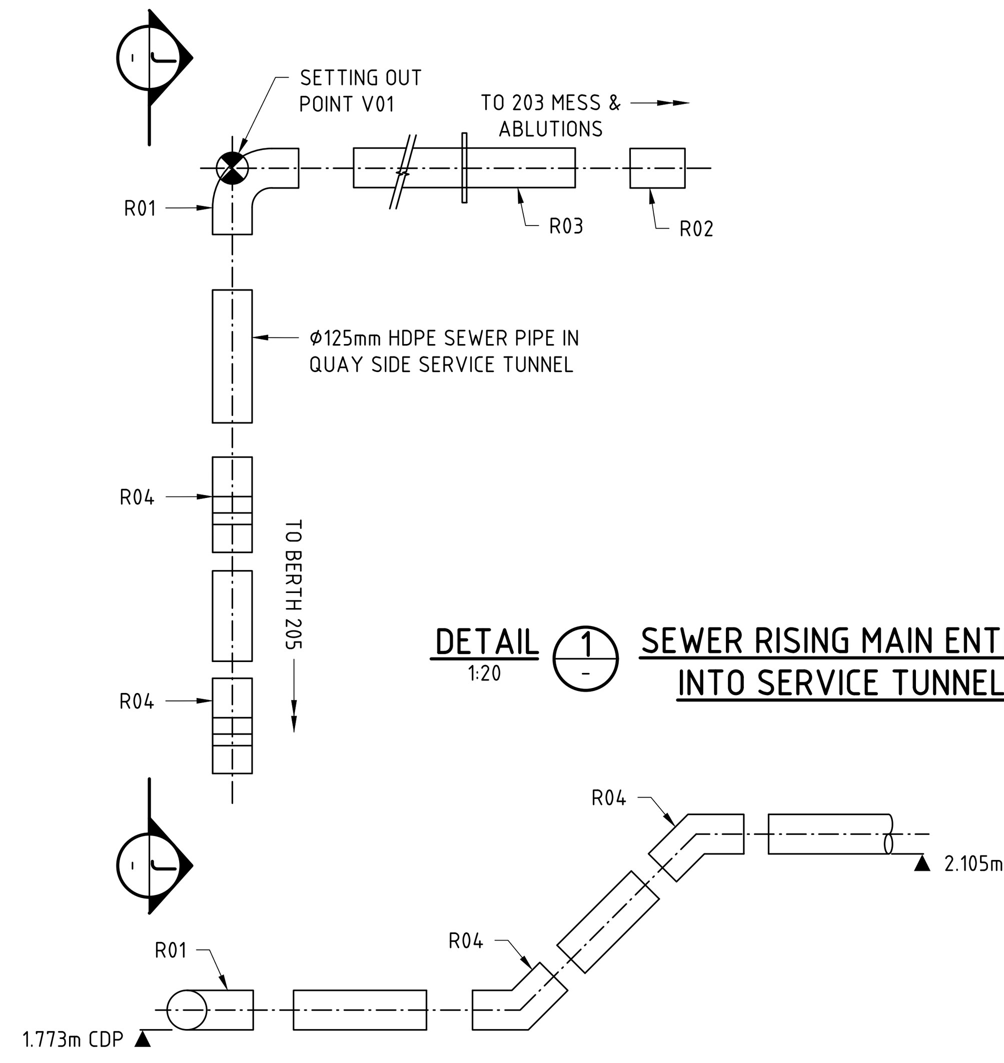

DETAIL 1 SEWER RISING MAIN ENTRY INTO SERVICE TUNNEL
1:20

SECTION J
1:20

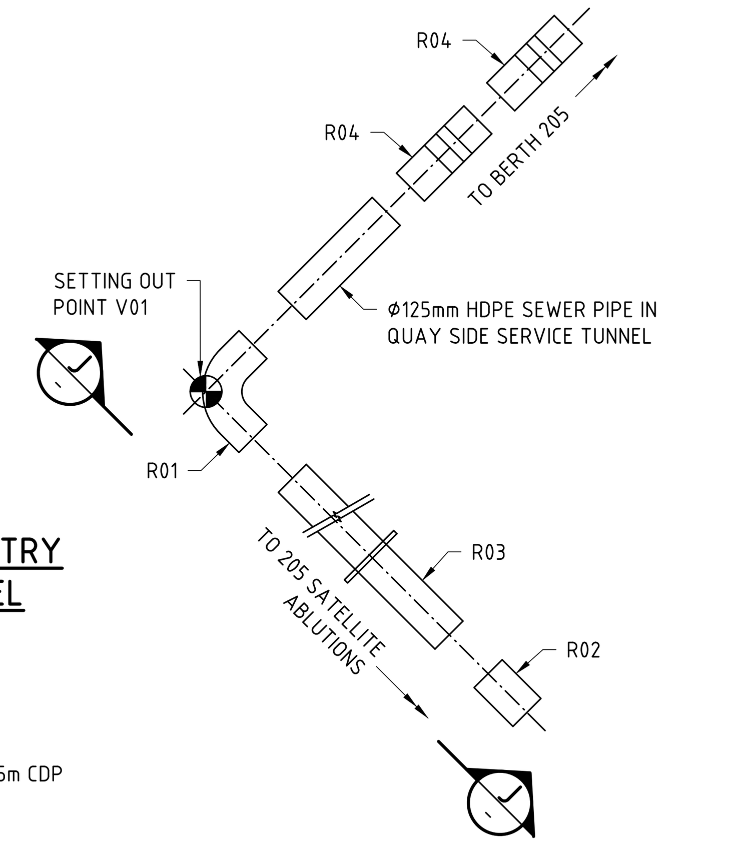

DETAIL 2 SEWER RISING MAIN EXIT FROM SERVICE TUNNEL
1:20

NOTES:

1. GENERAL

1.1. SEWER LINE SHALL BE CONSTRUCTED IN ACCORDANCE WITH THE RELEVANT PARTS OF SANS 1200L AND SANS 1200 LD.

1.2. ALL TRENCHES SHALL BE IN ACCORDANCE WITH SANS 1200 DB

1.3. ALL PIPE BEDDING SHALL BE IN ACCORDANCE WITH SANS 1200LB.

2. FASTENERS

2.1. BOLTS SHALL BE GR 8.8 TO BS 3692

2.2. BOLTS, NUTS AND WASHERS SHALL BE COATED WITH A ZINC COATING APPLIED BY THERMO DIFFUSION COATING (SHERARDIZING) IN ACCORDANCE WITH BS EN 13811:2003.

3. SUPPORT BRACKETS

3.1. PIPE SUPPORT FRAMES SHALL BE SPACED AT 2.5m INTERVALS.

3.2. ALL SUPPORT FRAMES SHALL BE COATED WITH A ZINC COATING APPLIED BY THERMO DIFFUSION COATING (SHERARDIZING) IN ACCORDANCE WITH BS EN 13811:2003.

4. HDPE PIPES

4.1. Ø125 HDPE PIPES SHALL BE PE 100 CLASS 10 WITH A STANDARD DIAMETER RATIO OF 11 IN ACCORDANCE WITH ISO 4427.

4.2. Ø125 HDPE PIPES SHALL BE JOINED TOGETHER BY ELECTROFUSION COUPLING IN ACCORDANCE WITH SANS 10286 PART 2.

4.3. COUPLINGS MAY NOT HAVE A PRESSURE RATING LOWER THAN THAT OF THE PIPES BEING JOINED TOGETHER.

4.4. Ø160mm HDPE DUCTS SHALL BE TYPE N 450 AND SHALL COMPLY WITH SANS 61386-24.

4.5. Ø160mm HDPE DUCTS SHALL BE JOINED TOGETHER WITH SLEEVE TYPE COUPLINGS.

5. PRECAST PROTECTION SLABS

5.3. PRECAST PROTECTION SLABS SHALL BE CONSTRUCTED WITH 40MPa CONCRETE.

5.4. PROTECTION SLABS SHALL BE REINFORCED WITH ONE ROW OF Y8 WELDED MESH REINFORCING WITH A PITCH OF 200mm.

5.5. THE COVER TO REINFORCEMENT SHALL BE 60mm.

6. CONCRETE ENCASEMENT

6.1. CONCRETE ENCASEMENT SHALL BE CONSTRUCTED WITH 40MPa CONCRETE.

7. GROUT

7.1. GROUT SHALL BE 40MPA NON SHRINK GROUT WITH A MAXIMUM AGGREGATE SIZE OF 10mm.

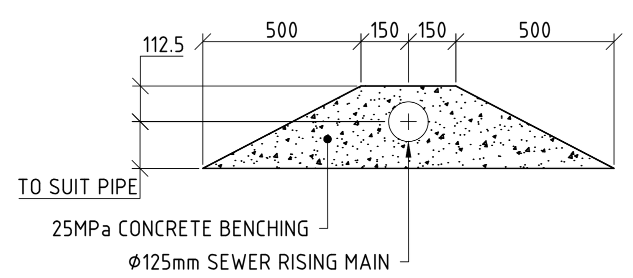

SECTION A (SH01)
1:20

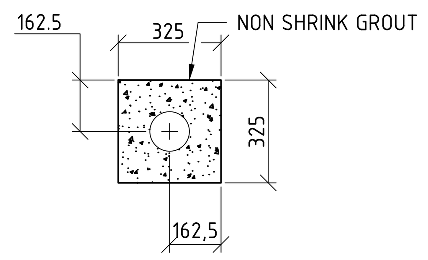

SECTION B (SH01)
1:20

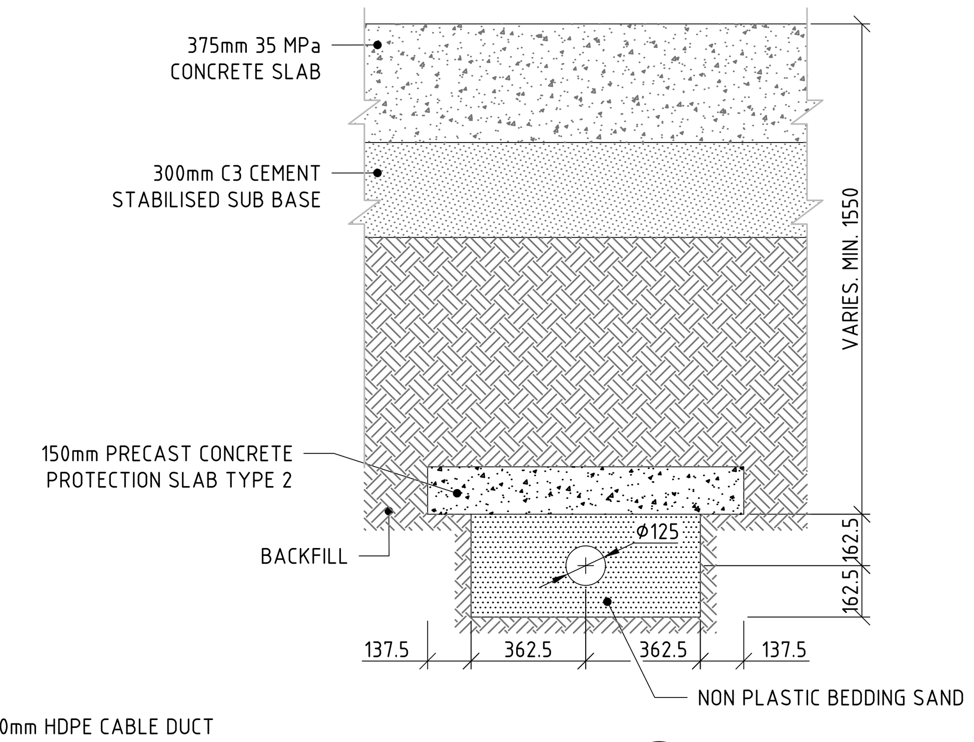

SECTION C (SH01)
1:20

DUCT INSTALLATION SEQUENCE:

1. CUT INITIAL 660×450mm HOLES BY STITCH-CORING AS SHOWN IN SECTION K.
2. INSTALL 1 NO. Ø125mmSEWER PIPE AND MAKE GOOD BY GROUTING AROUND DUCTS USING 40MPA NON-SHRINK GROUT WITH A MAXIMUM AGGREGATE SIZE OF 10mm.

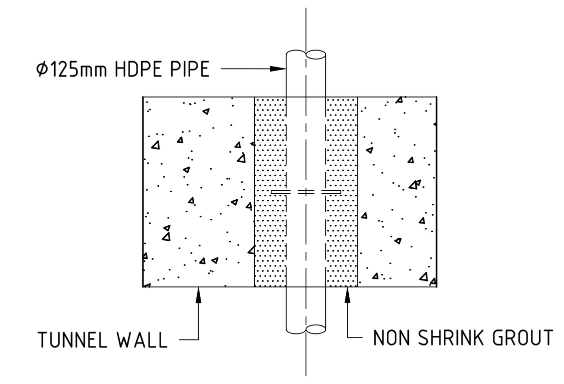

SECTION L
1:20

PRECAST PROTECTION SLABS				
	LENGTH (mm)	WIDTH (mm)	DEPTH (mm)	NO OFF.
TYPE 2	1500	1000	150	64

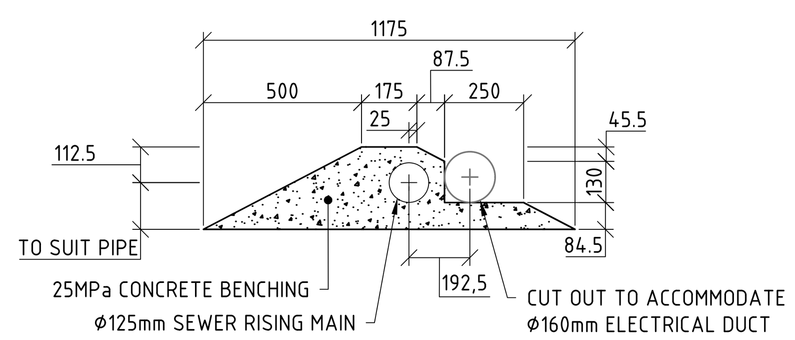

SECTION E (SH01)
1:20

DUCT INSTALLATION SEQUENCE:

1. CUT INITIAL 535×360mm HOLES BY STITCH-CORING AS SHOWN IN SECTION K.
2. INSTALL 1 NO. Ø160mm DUCT AND 1 NO. Ø125mm SEWER PIPE.
3. MAKE GOOD BY GROUTING AROUND DUCTS USING 40MPA NON-SHRINK GROUT WITH A MAXIMUM AGGREGATE SIZE OF 10mm.

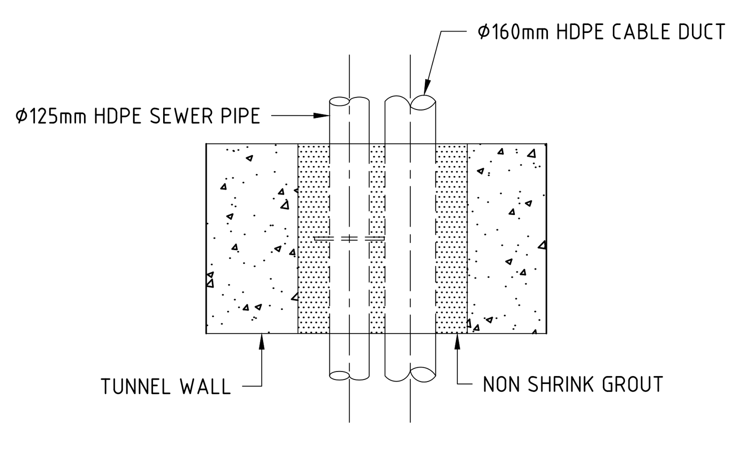

SECTION N
1:20

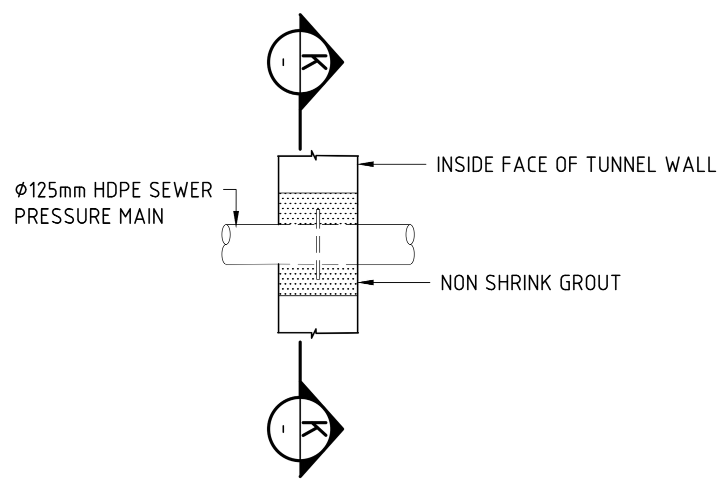

SECTION D (SH01)
1:20

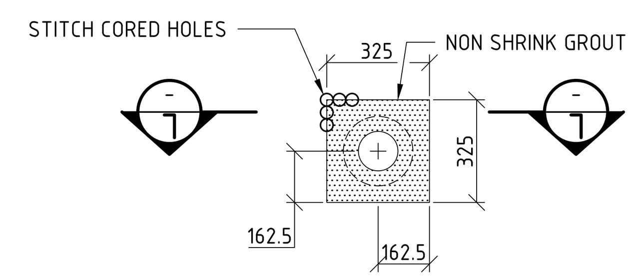

SECTION K
1:20

MARK	COMPONENT	NO. OF	DESCRIPTION
R01	272	2	Ø125mm 90° ELECTROFUSION COUPLING.
R02	173	2 **	Ø125mm HDPE ELECTROFUSION COUPLING.
R03	2400 350	2	Ø125mm HDPE PUDDLE PIPE. 2750mm LONG BOTH ENDS PLAIN.
R04	301	4	Ø125mm 45° ELECTROFUSION COUPLING.

** QUANTITY ONLY APPLIES TO COUPLINGS FOR SPECIAL FITTINGS ONLY. STANDARD PIPE LENGTHS ARE TO BE SUPPLIED COMPLETE WITH COUPLINGS.

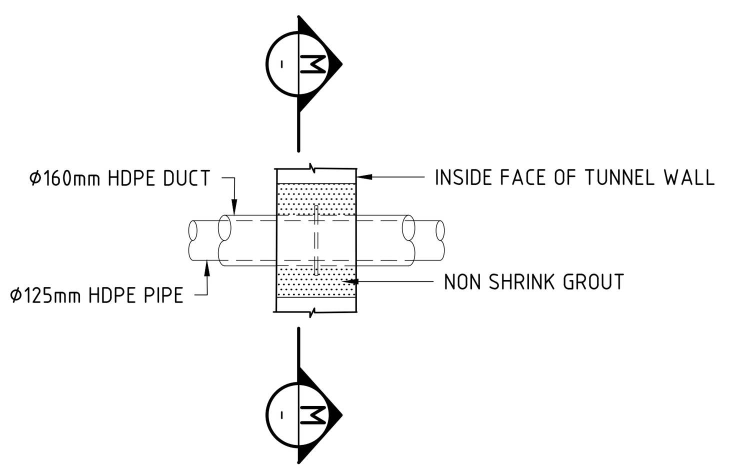

SECTION F (SH01)
1:20

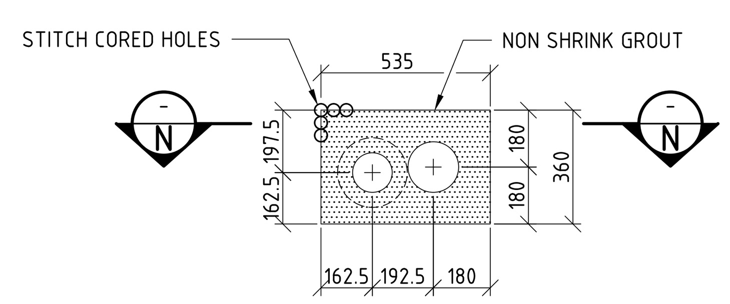

SECTION M
1:20

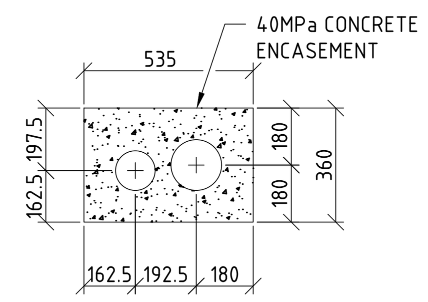

SECTION G (01)
1:20

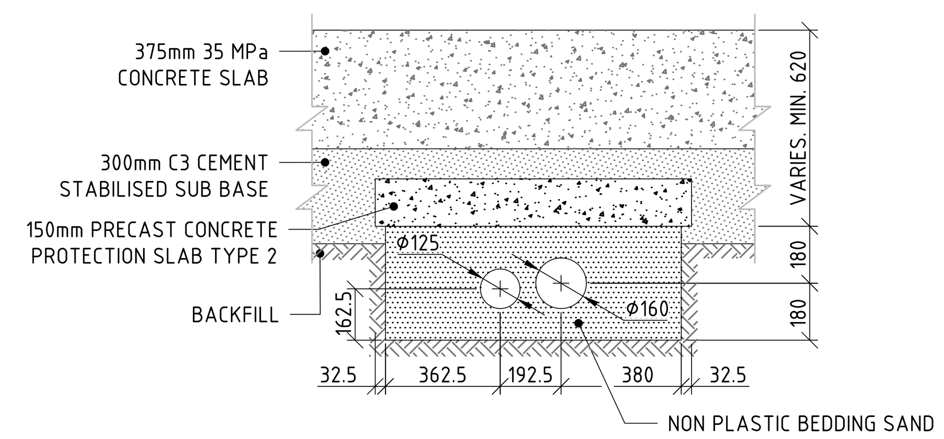

SECTION H (01)
1:20

DRAWING NO.	REFERENCE
1785-CO-130-C-DWG-0002	SEWER GENERAL ARRANGEMENT PHASES 2 & 3

REFERENCE DRAWINGS

Engineers
ZAA ENGINEERING PROJECTS & NAVAL ARCHITECTS
P O Box 26546
HOUT BAY 7872
Tel: +27(21) 791 9100
E-Mail: zaaepna@zaaepna.com
31 Melkhout Crescent
Hout Bay 7806
Fax: +27(21) 790 4470

PROJECT NO	DIS CODE	AREA	DISP	TYPE	DRG NO	SHEET	STATUS	REV
1785	CO	130	C	DWG	0003	03	T	0A

NO.	DESCRIPTION	BY	CHK'D	APP'D	DATE
0A	ISSUED FOR TENDER	DC	MC	JZ	2019.07.26

REVISIONS / ISSUE AUTHORIZATION

This Document including all design and information therein is Confidential Intellectual Property of ZAA Engineering Projects and Naval Architecture (Pty) Ltd. Copyright and all other rights are reserved by ZAA. This Document may only be used for its intended purpose.

EPCM CONSULTANT: TNPA

TITLE	NAME	SIGNATURE	DATE
LEAD DES. ENG.			
ENG. COORD.			
ENG. MANAGER			
AREA MANAGER			
PROJECT MGR.			

DIVISION

DIV.	TITLE	NAME	SIGNATURE	DATE

ORIGINATOR: ZAA

TITLE	NAME	SIGNATURE	DATE
DRAWN	DC	DC	19 07 26
CHECKED	MC/WvW	[signature]	19 07 26
ENG. COORD.			
DISCIP. ENG.			
ENG. MANAGER			
AREA MANAGER			

PR.ENG. / PR.TECH.

		DATE
NAME	J. ZIETSMAN	
SIGNATURE	J. Zietsman	19 07 26
REG. NUMBER	760293	
SCALE :	OR AS NOTED	A1

Transnet National Ports Authority
237 MAHATMA GANDHI ROAD
DURBAN
P.O. BOX 31683, DURBAN
TEL: 031 361 8852
TRANSNET

PORT OF DURBAN

DCT BERTHS 203 to 205 RECONSTRUCTION DEEPENING AND LENGTHENING

SEWER TYPICAL DETAILS

SHEET 3 OF 8

PROJECT NUMBER	DV	FBS	DIS.	TYPE	DRG. NO.	SHT.	REV.	ID
2122830	1	130	C	GA	1002	03	0A	DC